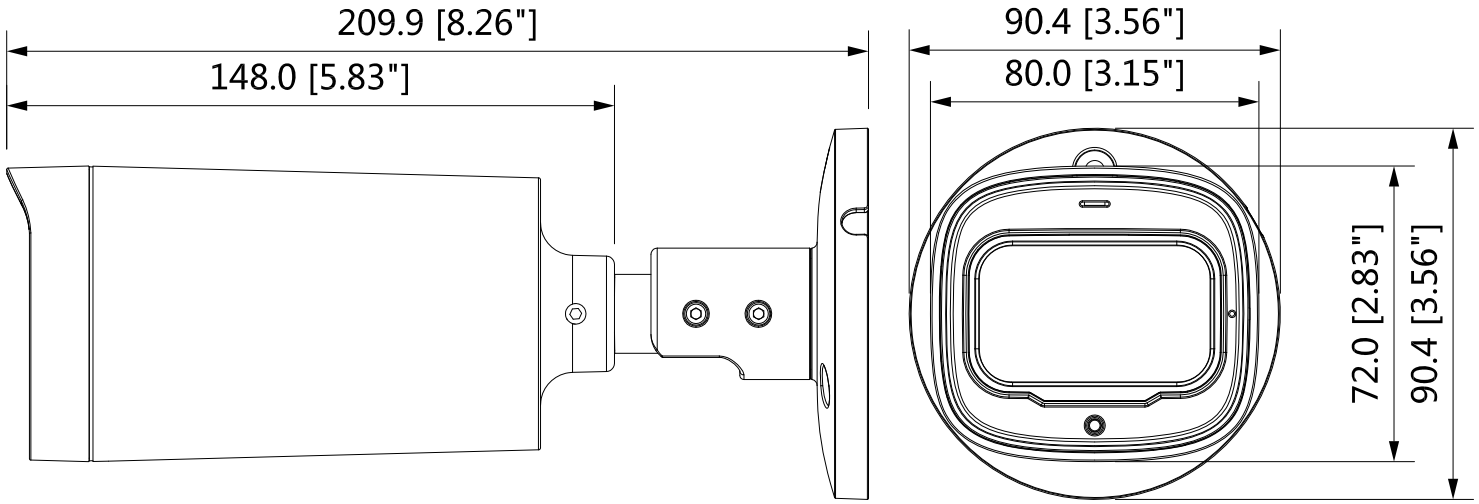
209.9 [8.26"]
148.0 [5.83"]
90.4 [3.56"]
80.0 [3.15"]
72.0 [2.83"]
90.4 [3.56"]