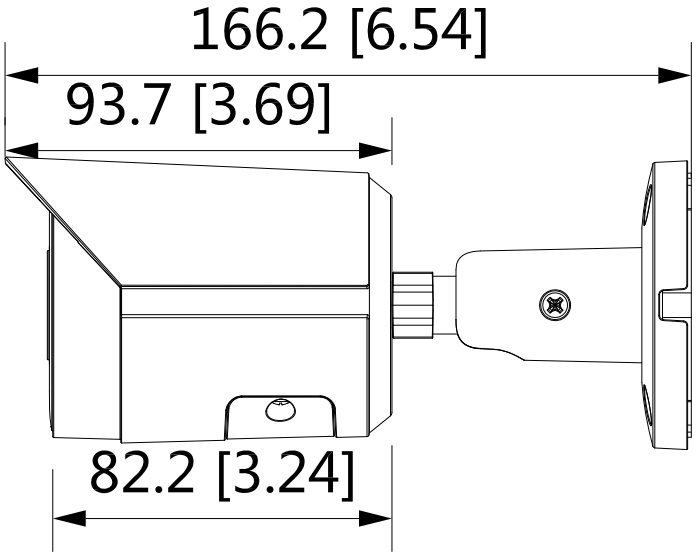
166.2 [6.54]
93.7 [3.69]
82.2 [3.24]

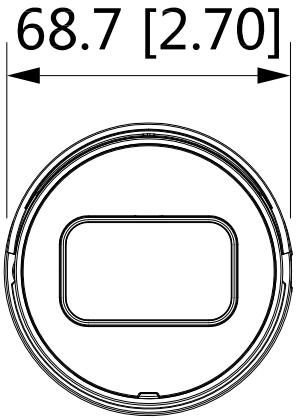
68.7 [2.70]

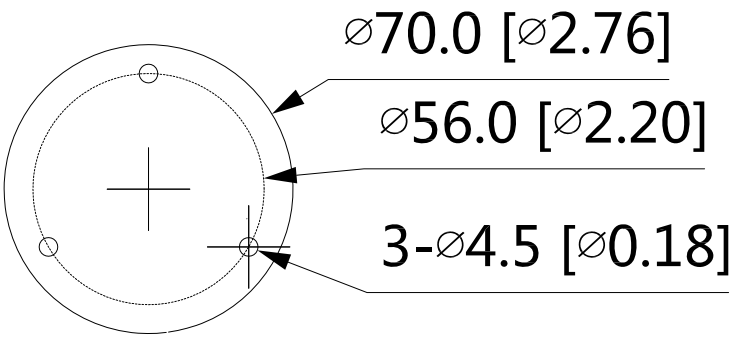
⌀70.0 [⌀2.76]
⌀56.0 [⌀2.20]
3-⌀4.5 [⌀0.18]